Queen Mary
University of London
Science and Engineering

EBU4202: Digital Circuit Design
Basic Logic Functions and Switching Algebra

Dr. Md Hasanuzzaman Sagor (Hasan)
Dr. Chao Shu (Chao)
Dr. Farha Lakhani (Farha)

School of Electronic Engineering and Computer Science,
Queen Mary University of London,
London, United Kingdom.

Overview: Switching Algebra & Combinational Logic Design

* **Switching Algebra**
* **Combinational Circuit Analysis & Synthesis**

Chapters 4 & 6 – "Digital Design: Principles and Practices" book

Combinational Logic Circuits: Analysis & Synthesis

- **Digital Circuits**:
  - **Combinational Logic Circuit**: a circuit whose outputs depend on its current inputs.
  - **Sequential Logic Circuit**: a circuit whose outputs depend not only on current inputs, but also on past inputs.

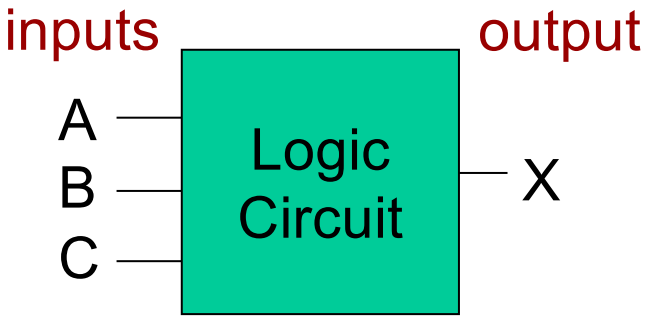

Studied later in the course.

- These slides are concerned with the ***analysis*** and ***synthesis*** of ***combinational*** logical ***circuits***.
  - **Analysis** → start from a logic diagram of a circuit and derive a formal description of the function of the circuit.
  - **Synthesis** → start with a formal description of the function of a circuit and proceed to a logic diagram that performs the required function.

Switching Algebra

- Switching Algebra:
  - Two-valued boolean algebra (George Boole 1815-64)
  - For a variable *X*:
    - **X=0** *or* **X=1**

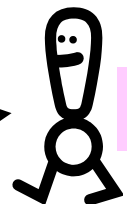

No other values are allowed.

  - Many other possible "boolean" representations:
    - X = *Light on* or X = *Light off*
    - X = voltage HIGH or X = voltage LOW
  - *Basic operations* are AND, OR and complement (or *invert*) (AND/OR/NOT).

Basic Gates (1/3): AND

- Performs the AND logic operation on its *inputs* and *outputs* its result.

Symbol → 2个

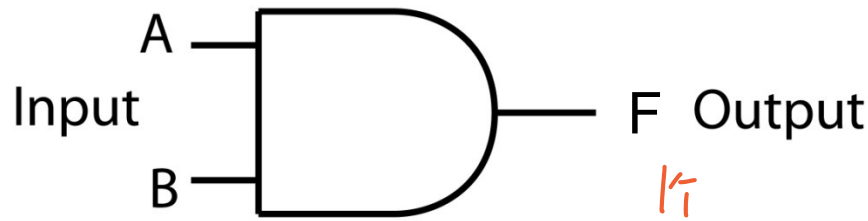

1个

Truth table →

Input		Output
A	B	F
0	0	0
0	1	0
1	0	0
1	1	1

Binary ascending counting order.

Circuit Switching Diagram →

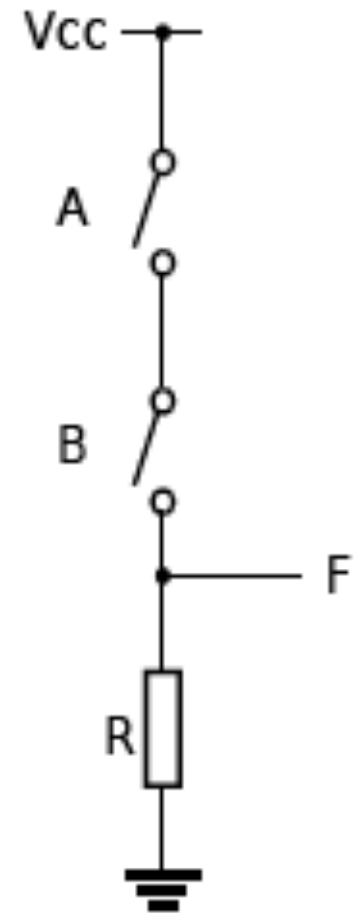

Switching Algebra Equation → F = A.B *or* F = AB

用点表示 and

Basic Gates (2/3): OR

- Performs the OR logic operation on its *inputs* and *outputs* its result.

Symbol →

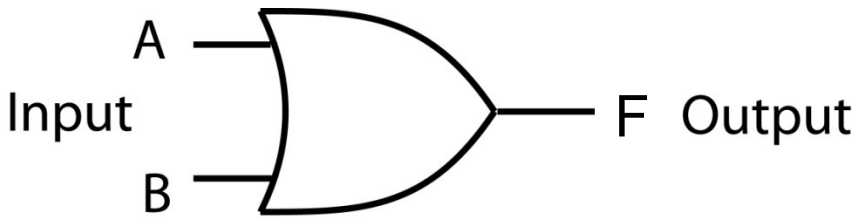

Truth table →

Input		Output
A	B	F
0	0	0
0	1	1
1	0	1
1	1	1

Circuit Switching Diagram →

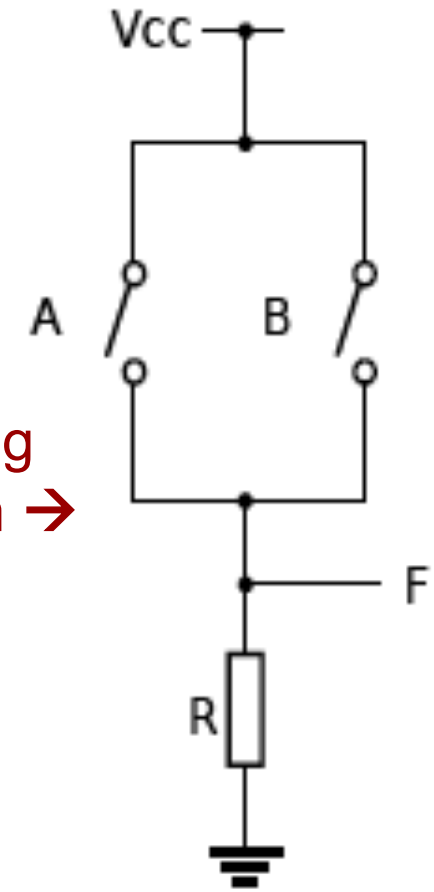

Switching Algebra Equation → F = A+B

+ 表示 아

Basic Gates (3/3): NOT

Other notation (not used here): F=~A *or* F=¬A.

- Also called an inverter, it produces an *output* value that is the opposite of the *input* value.

Symbol →

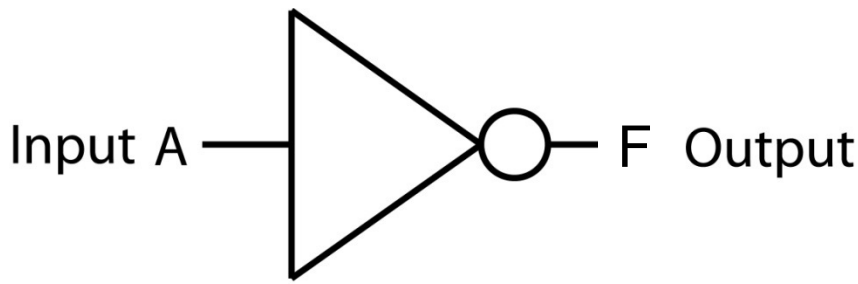

Truth table →

Input A	Output F
0	1
1	0

Circuit Switching Diagram →

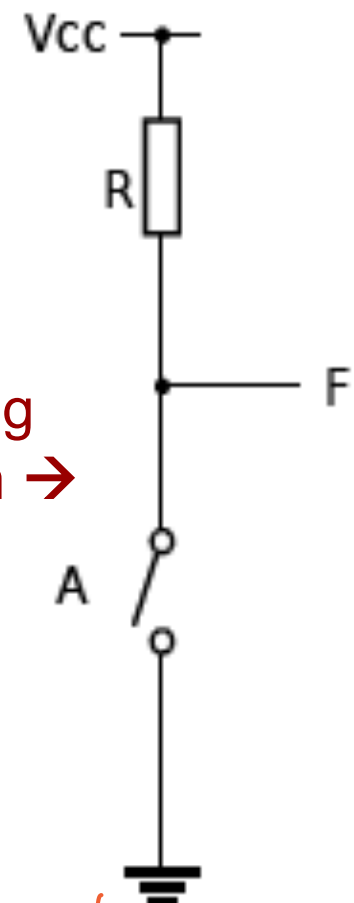

Switching Algebra Equation → F = A' *or* F = $\overline{A}$

用 prime / 省 表示 complement

Example: Combining Basic Gates

- Any *Boolean function* can be represented with a Truth Table.

Switching Algebra

$F(X,Y,Z) = \underline{X + \overline{Y}.Z}$

先把 $\overline{Y}.Z$
再弄上 X

Logic Gate Diagram

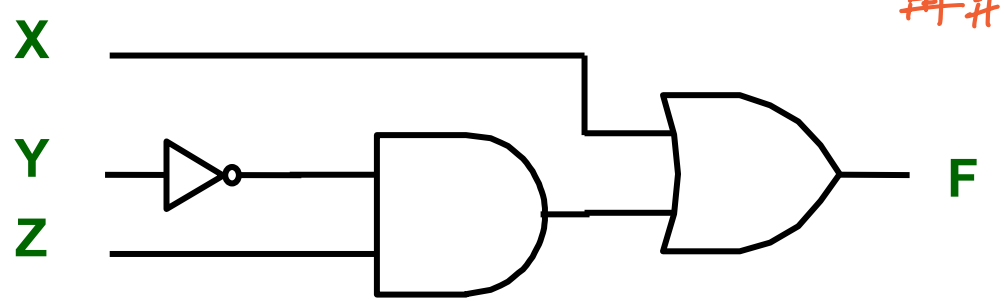

Truth Table

X	Y	Z	$F = X+\overline{Y}.Z$
0	0	0	0
0	0	1	1
0	1	0	0
0	1	1	0
1	0	0	1
1	0	1	1
1	1	0	1
1	1	1	1

More Gates

- There are more gates available for the designer to use than those discussed so far.
- Of particular importance to the electronics industry are the *Buffer*, *NAND*, *NOR*, *Exclusive-OR* and *Exclusive-NOR* gates.
  - NAND and NOR gates are particularly important because they are faster than AND and OR gates.

Any digital circuit of any complexity can be made from **NAND** gates.

Why do you think that is the case?.....to answer this you need to look at the circuits that are inside the gates…….

Other Gates (1/5): Buffer

- Also called a non-inverting buffer, it asserts its *output* signal if and only if its *input* is asserted.

Symbol →

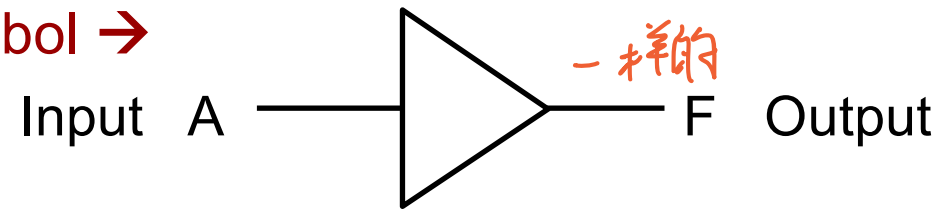

Truth table →

A	F
0	0
1	1

Switching Algebra Equation → F = A

Circuit Switching Diagram →

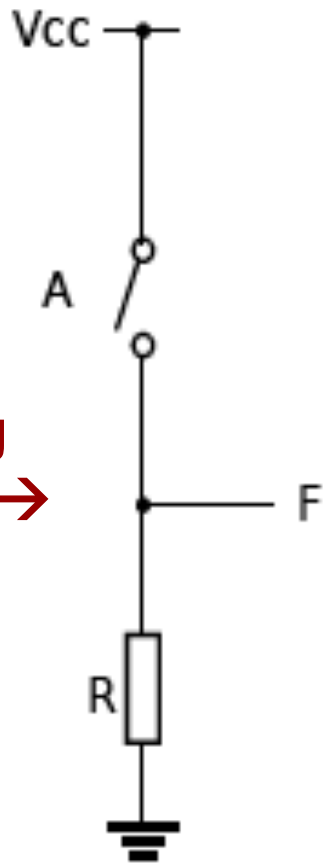

NOTE: You might ask the question "Why do we need this gate, it does not seem to do anything". It has important input and output characteristics that make it useful in practical circuits.

Other Gates (2/5): NAND

- It does the *opposite of* an AND gate.

Symbol →

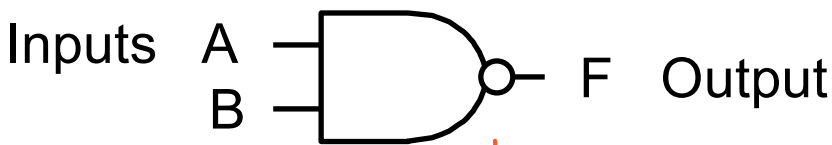

这个bubble可以invert.

Truth table →

A	B	F
0	0	1
0	1	1
1	0	1
1	1	0

Switching Algebra Equation →

F = (A.B)' *or*

F = (AB)' *or*

F = $(\overline{A.B})$ *or*

F = $(\overline{AB})$

Circuit Switching Diagram →

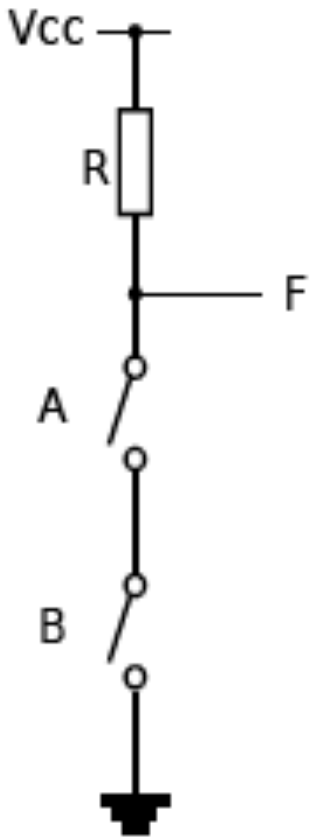

Other Gates (3/5): NOR

- It does the *opposite of* an OR gate.

Symbol →

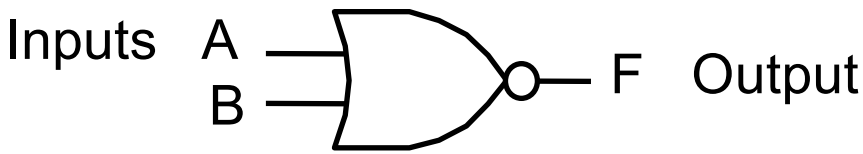

Truth table →

A	B	F
0	0	1
0	1	0
1	0	0
1	1	0

Switching Algebra Equation → $F = (A+B)'$ *or* $F = \overline{(A+B)}$

Circuit Switching Diagram →

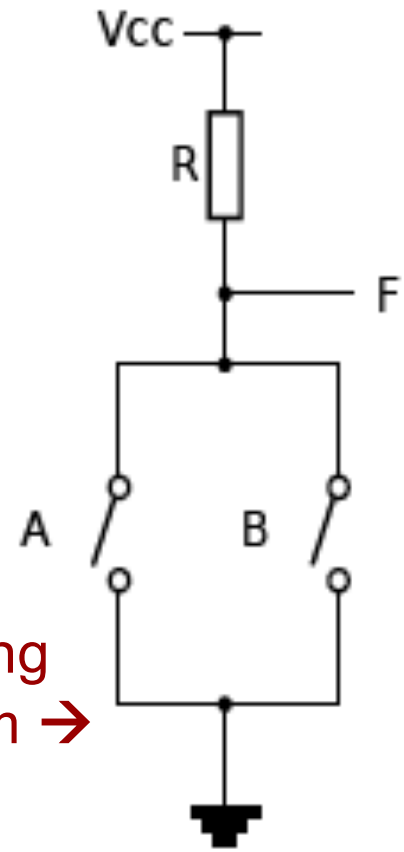

Queen Mary University of London

exclusive or

Other Gates (4/5): XOR 异或

- Its *output* is high, only when the *inputs are* different.

Symbol →

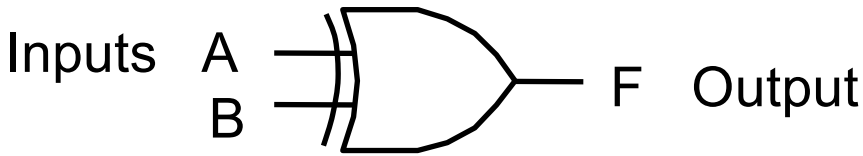

Truth table →

A	B	F
0	0	0
0	1	1
1	0	1
1	1	0

相同时不行

Switching Algebra Equation →

$F = (A \oplus B)$ *or*

$F = A'B + AB'$ *or*

$F = \bar{A}B + A\bar{B}$

XOR=Exclusive OR

Circuit Switching Diagram →

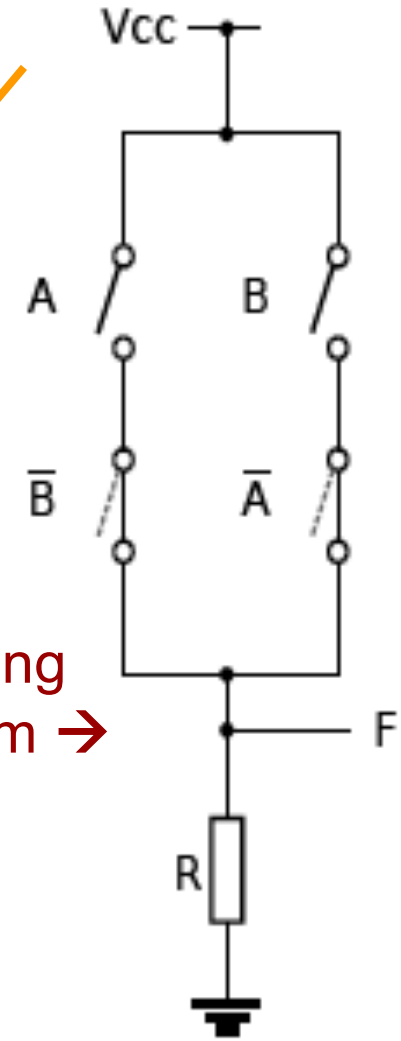

Other Gates (5/5): XNOR

- It does the *opposite of* an XOR gate.

Symbol →

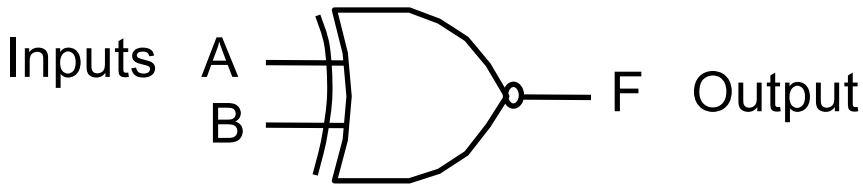

Truth table →

A	B	F
0	0	1
0	1	0
1	0	0
1	1	1

相同时为真

Switching Algebra Equation →

$F = (A \oplus B)'$ *or*

$F = \overline{(A \oplus B)}$ *or*

$F = A'B' + AB$ *or*

$F = \bar{A}\bar{B} + AB$

Circuit Switching Diagram →

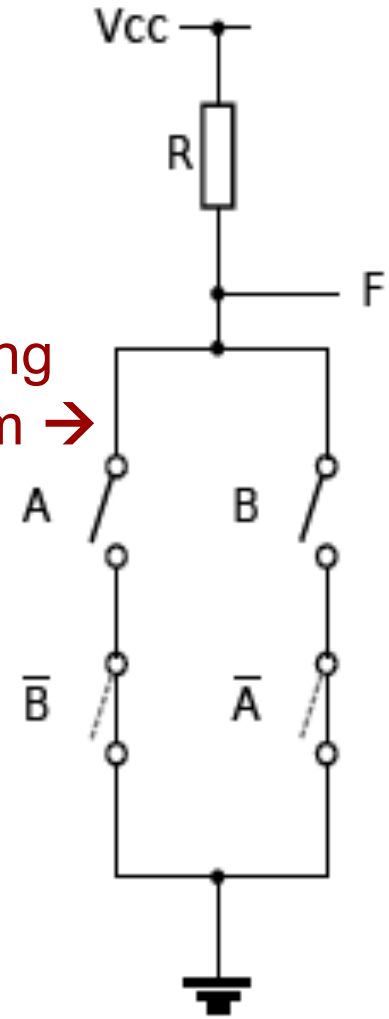

XNOR=Exclusive NOR

Gates Summary (1/3)

AND

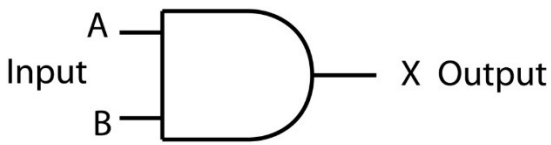

OR

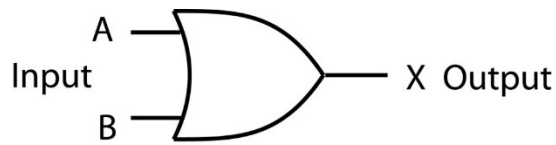

NOT

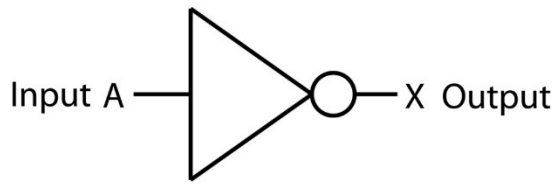

NAND

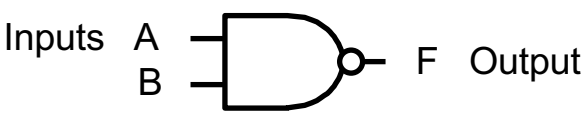

NOR

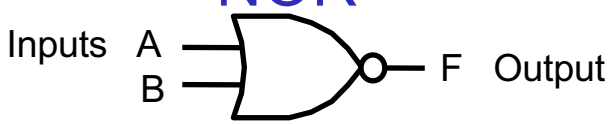

non-inverting buffer

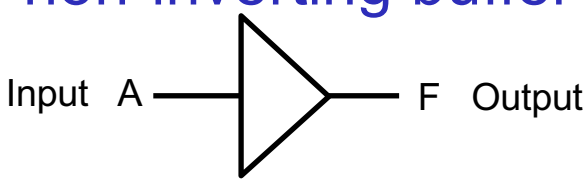

XOR

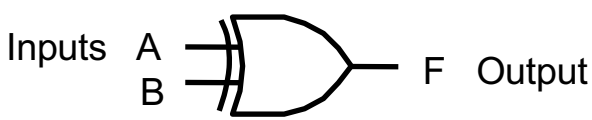

XNOR

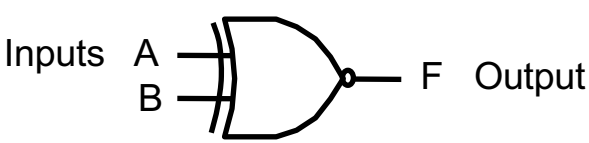

Gates Summary (2/3)

AND

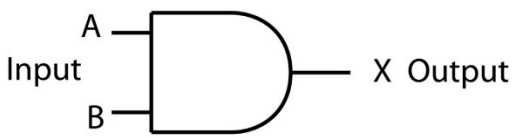

Input		Output
A	B	X
0	0	0
0	1	0
1	0	0
1	1	1

$X = A.B$

OR

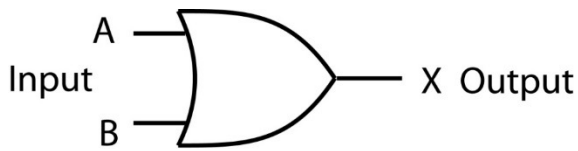

Input		Output
A	B	X
0	0	0
0	1	1
1	0	1
1	1	1

$X = A+B$

NOT

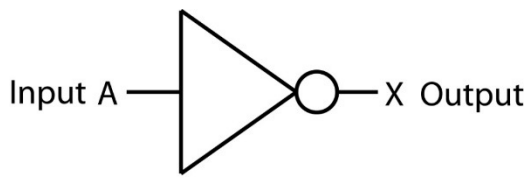

Input	Output
A	X
0	1
1	0

$X = A'$

Gates Summary (3/3)

NAND

A	B	F
0	0	1
0	1	1
1	0	1
1	1	0

$F = (A.B)'$

NOR

A	B	F
0	0	1
0	1	0
1	0	0
1	1	0

$F = (A+B)'$

XOR

A	B	F
0	0	0
0	1	1
1	0	1
1	1	0

$F = (A \oplus B)$

$F = A'B+AB'$

XNOR

A	B	F
0	0	1
0	1	0
1	0	0
1	1	1

$F = (A \oplus B)'$

$F = A'B'+AB$

Why do we manipulate equations?

- Before we get to the theorems, **why worry about manipulating Boolean equations**?
  - Simplification of digital circuits.
  - Fewer gates required.
  - Potential for faster operation.
  - Smaller is always better!!

Switching Algebra: Basic Definitions

- ***Literal***: variable or the complement of a variable.
  - **Examples**: **X**, **Y**, **X′**, **Y′**
- ***Product Term***: single literal or logical product of 2+ literals.
  - **Examples**: **X**, **X·Y·Z′**, **X·Y′**
- ***Sum of Products Expression (SOP)***: logical sum of product terms
  - **Example**: **X·Z′ + X·Y·Z′ + X·Y′**
- ***Sum Term***: single literal or logical sum of 2+ literals.
  - **Examples**: **X**, **X + Y + Z′**, **X + Y′**
- ***Product of Sums Expression (POS)***: logical product of sum terms
  - **Example**: **(X + Z′)·(X + Y + Z′)·(X + Y′)**

Precedence Rules & Axioms

- **Precedence Rules**: ′, · and **+**. (invert, and, or)

  invert and or

- **Axioms**:
  - A minimum set of basic mathematic definitions that are assumed to be always **True** and from which we can derive theorems.
  - Let **X** be a logic variable taking on values **0** or **1**.

(A1) X=0 if X≠1	(A1') X=1 if X≠0
(A2) X=0 then X′=1	(A2') X=1 then X′=0
(A3) 0 ·0=0	(A3') 1+1=1
(A4) 1 ·1=1	(A4') 0+0=0
(A5) 0 ·1=1 ·0=0	(A5') 0+1=1+0=1

Single Variable Theorems & Perfect Induction

- Let **X** be a logic variable: 想用到数 → and 0

(T1) X+0 = X	(T1') X·1 = X
(T2) X+1 = 1	(T2') X·0 = 0
(T3) X+X = X	(T3') X·X = X
(T4) (X')' = X	
(T5) X+X' = 1	(T5') X·X' = 0

These theorems can be proved using axioms via ***perfect induction***.

- **Perfect Induction** (better known as ***common sense***).
  - ***Example***:
    - (T1′) X·1 = X

Proof

Hence, X.1=X.

2 possible values for literal ***X***

$$\begin{cases} [X = 0] \rightarrow 0 \cdot 1 = 0 \ (\textit{by axiom } A5) \\ [X = 1] \rightarrow 1 \cdot 1 = 1 \ (\textit{by axiom } A4) \end{cases}$$

X = 1011

X′ = 0100

X+X′ = 1111

Two (and Three) Variable Theorems

dual

+变·
·变+

不是invert

(T6) X + Y = Y + X	(T6') XY = YX	交换 *(Commutativity)*
(T7) (X + Y) + Z = X + (Y + Z)	(T7') (XY)Z = X(YZ)	结合 *(Associativity)*
(T8) XY + XZ = X (Y + Z)	(T8') (X + Y)(X + Z) = X + YZ	*(Distributivity)* 分配
(T9) X + XY = X	(T9') X(X + Y) = X	*(Covering)* Absorption
(T10) XY +XY' = X	(T10') (X + Y)(X + Y') = X	*(Combining)*
(T11) XY +X'Z + YZ = XY + X'Z		*(Consensus)*
(T11') (X + Y)(X' + Z)(Y + Z) = (X + Y) (X' + Z)		

x(x+Y+Z)

xx + xZ + XY + YZ

xx + xY

耶 耶

耶不耶不重要了

Adsorption Theorem (not in the textbook):
(T*) X + X'Y = X + Y **(T*)'** X(X' + Y) = XY

护手霜

All theorems can be proved, either *algebraically* or through the use of a *truth table*.

Principle of Duality: Any theorem or identity in Switching Algebra remains True if **0's** and **1's** are swapped, and the same for • (**AND**) and **+** (**OR**).

Principle of duality

+. 互换依然成立.

Example: Proof by Truth Table

- Show that …

(T7′) $(X \cdot Y) \cdot Z = X \cdot (Y \cdot Z)$

同离散

证明 $x + x'y = x + y$

用 T8′

$x + x'y = (x + x')(x + y)$

$= x + y$

X	Y	Z	XY	YZ	(XY)Z	X(YZ)
0	0	0	0	0	0	0
0	0	1	0	0	0	0
0	1	0	0	0	0	0
0	1	1	0	1	0	0
1	0	0	0	0	0	0
1	0	1	0	0	0	0
1	1	0	1	0	0	0
1	1	1	1	1	1	1

N Variable Theorems

- **Two or three variables' theorems can be extended** to an arbitrary number of variables, ***N***:
  - ***Generalised Idempotency***

(T12) $X+X + \ldots + X = X$

(T12') $X \cdot X \cdot \ldots \cdot X = X$

(T14) states: given any *Nvariable* logic expression, its complement can be obtained by swapping **+** and **·**, and complementing all variables.

  - ***De Morgan's Theorems***

(T13) $(X_1 \cdot X_2 \cdot \ldots \cdot X_n)' = X_1'+X_2' + \ldots + X_n'$

(T13') $(X_1+X_2 + \ldots + X_n)' = X_1' \cdot X_2' \cdot \ldots \cdot X_n'$

(T14): condensed form for **(T13)** & **(T13')**.

  - ***Generalised De Morgan's Theorem***

(T14) $[F(X_1,X_2,\ldots,X_n,+,\cdot)]' = F(X_1',X_2',\ldots,X_n',\cdot,+)$

  - ***Shannon's Expansion Theorems***

(T15) $F(X_1,X_2,\ldots,X_n)= X_1 \cdot F(1,X_2,\ldots,X_n)+X_1' \cdot F(0,X_2,\ldots,X_n)$

(T15') $F(X_1,X_2,\ldots,X_n)=[X_1+F(0,X_2,\ldots,X_n)] \cdot [X_1'+F(1,X_2,\ldots,X_n)]$

De Morgan: "Break the line and change the sign"

De Morgan's Theorems: Truth Tables

(T13) $(X + Y)' = X' \bullet Y'$ (T13') $(X \bullet Y)' = X' + Y'$

(T13), **(T13')** for **N=2** variables.

X	Y	X'	Y'	X+Y	(X+Y)'	X'•Y'	X•Y	(X•Y)'	X' +Y'
0	0	1	1	0	1	1	0	1	1
0	1	1	0	1	0	0	0	1	1
1	0	0	1	1	0	0	0	1	1
1	1	0	0	1	0	0	1	0	0

Like *Theorem 8*, **De Morgan's law** may be used to convert between a sum of products and a product of sums.

The Principle of Duality

- The **Principle of Duality**:
  - Used in *simplifying logic equations*.
  - Obtain the *dual* by interchanging OR and AND operations.
    - **Example**:
      - The dual of $\mathbf{F = X \bullet Y + Z \bullet W}$ is $\mathbf{F^D = (X + Y) \bullet (Z + W)}$.

Principle of Duality: Not the same as saying the two expressions are equal!

Complements

- How do we ***get the complement of a function***?
  - Can derive the complement of a function algebraically by applying De Morgan's theorem.

    or

  - Can obtain via Truth Table by interchanging ***1's*** and ***0's*** for the function **F**.

    or

  - Can obtain by interchanging **AND** and **OR** operations and complementing each variable.

This is a *straightforward application of De Morgan's theorem*.

Example: Complement Function

Truth Table

A	B	C	F	F'
0	0	0	0	1
0	0	1	1	0
0	1	0	1	0
0	1	1	0	1
1	0	0	0	1
1	0	1	0	1
1	1	0	0	1
1	1	1	0	1

Using a Truth Table to find **F'**.

Find the complement of **F**:

F = A'BC' + A'B'C

Step 1: Find the Dual.

$$F^D = (A' + B + C')(A' + B' + C)$$

全部取反

Step 2: Complement each variable.

$$F' = (A+B'+C)(A+B+C')$$

The result is the Complement Function!

Consensus Theorem (T11)

- Useful in simplifying Boolean expressions
  - Allows the elimination of unnecessary terms.

Truth Table

X	Y	Z	F	G
0	0	0	0	0
0	0	1	1	1
0	1	0	0	0
0	1	1	1	1
1	0	0	0	0
1	0	1	0	0
1	1	0	1	1
1	1	1	1	1

Show: $XY + \overline{X}Z + YZ = XY + \overline{X}Z$

$$F = XY + \overline{X}Z + YZ = XY + \overline{X}Z + YZ\overbrace{(X+\overline{X})}^{=1}$$

expand $\rightarrow$ $= XY + \overline{X}Z + XYZ + \overline{X}YZ$

reorder $\rightarrow$ $= XY + XYZ + \overline{X}Z + \overline{X}YZ$

factorise $\rightarrow$ $= XY(\cancel{1 + Z}) + \overline{X}Z(\cancel{1 + Y})$

$$G = XY + \overline{X}Z$$

=1

$\therefore$ **YZ** is an unnecessary (or redundant) term

1 or anything is 1

Adsorption Theorem

Adsorption Theorem (not in the textbook):
(T*) X + X'Y = X + Y **(T*)'** X(X' + Y) = XY

Proof:

$$X + X'Y = (X + X')(X + Y) \quad (T8')$$
$$= 1.(X+Y) \quad (T5)$$
$$= X+Y \quad (T1')$$

(T8') (X + Y)(X + Z) = X + YZ

(T5) X+X' = 1

(T1') X·1 = X

Theorems (T8) – (T11)

- **Theorem (T8)** may be used to convert a ***product of sums*** expression to a ***sum of products*** expression.
- **Theorem (T8')** is often used to convert a ***sum of products*** expression to a ***product of sums*** expression.
- **Theorems (T9)**, **(T10)**, and **(T11)** are often used to **minimise** (or *simplify*) **a logic circuit**.
  - ***Shared property*** by these theorems: there is a reduction in the number of logic gates from left to right.

Examples of this later on!

有function → 可以建 circuit.

简洁的f → 更快

Designing with NAND gates

- ***Examples***:

This is only to simplify the implementation!

INVERTER

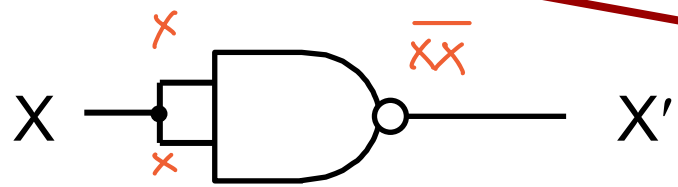

AND

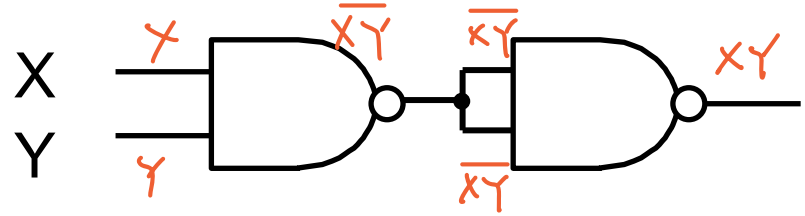

((X•Y)′)′ = X•Y

OR

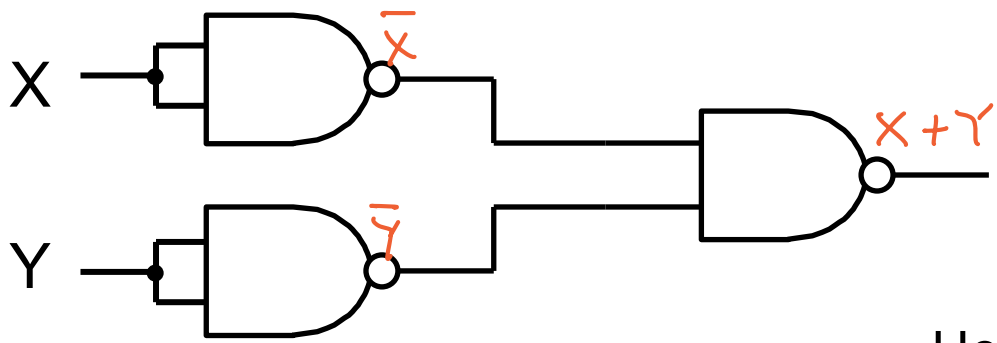

(X′•Y′)′ = X+Y

用NAND可以构建所有.

Here, **+** does not represent addition.

$\overline{AB}$

1个 7400 chip

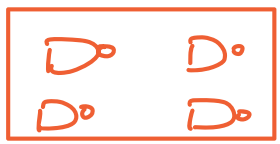

这样的话不浪费.

NAND Gates: 2 ways to view

- ***3-input NAND*** gate: bubble表取反.

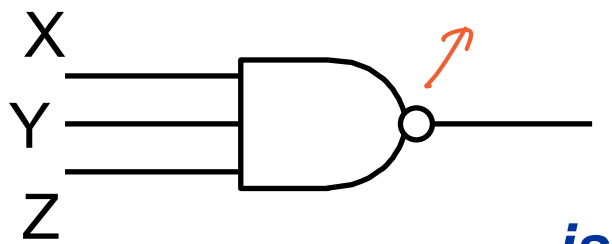

(X•Y•Z)′

is equivalent to

X	Y	Z	F
0	0	0	1
0	0	1	1
0	1	0	1
0	1	1	1
1	0	0	1
1	0	1	1
1	1	0	1
1	1	1	0

- ***3 INVERTED input OR*** gate:

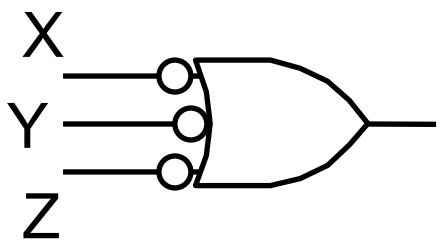

X′+Y′+Z′

Designing with NOR gates

- ***Examples***:

INVERTER

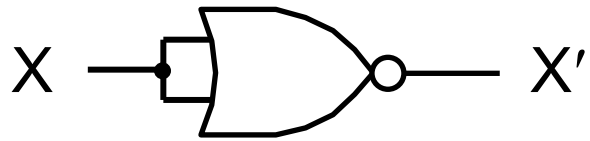

This is only to simplify the implementation!

OR

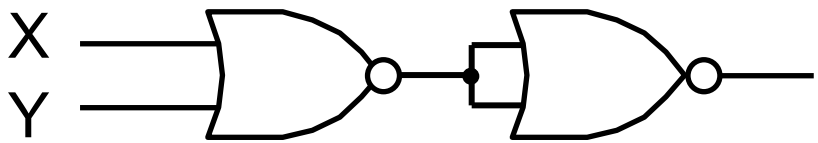

((X+Y)′)′ = X+Y

AND

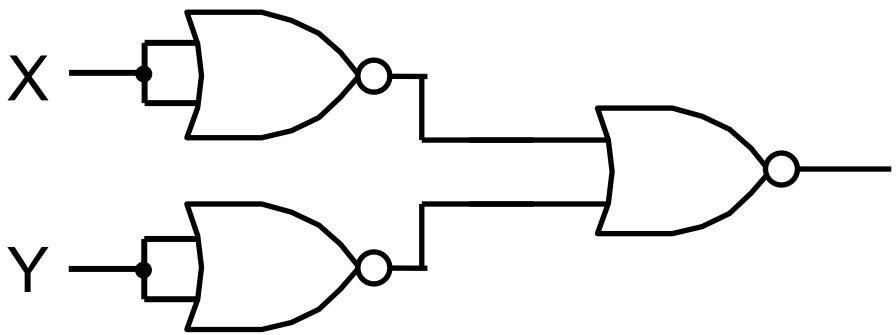

(X′+Y′)′ = X•Y

NOR Gates: 2 ways to view

- ***3-input NOR*** gate:

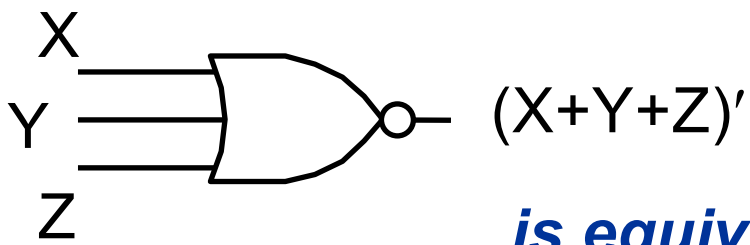

is equivalent to

- ***3 INVERTED input AND*** gate:

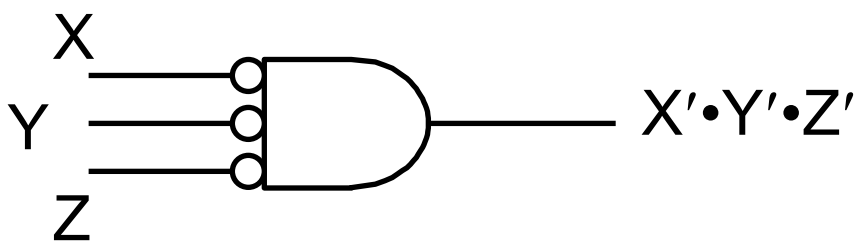

X	Y	Z	F
0	0	0	1
0	0	1	0
0	1	0	0
0	1	1	0
1	0	0	0
1	0	1	0
1	1	0	0
1	1	1	0

Exclusive OR Logic Gates: Properties

- **XOR** and **XNOR** gates:

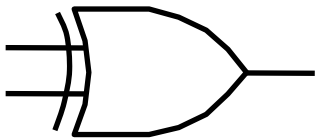

$Z = X \oplus Y$

XOR

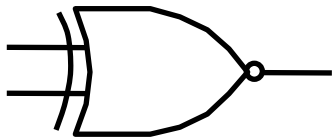

$Z = \overline{X \oplus Y}$

XNOR

- ***Identities***:

$X \oplus 0 = X$ $\quad$ $X \oplus 1 = X'$ $\quad$ $X \oplus X = 0$

$X \oplus X' = 1$ $\quad$ $X \oplus Y' = (X \oplus Y)'$ $\quad$ $X' \oplus Y = (X \oplus Y)'$

$X \oplus Y = Y \oplus X$ $\quad$ $(X \oplus Y) \oplus Z = X \oplus Y \oplus Z$

XOR & XNOR Gates

- **XOR** and **XNOR** gates can be designed using basic gates (i.e., *inverted input OR gates* and *NAND gates*):

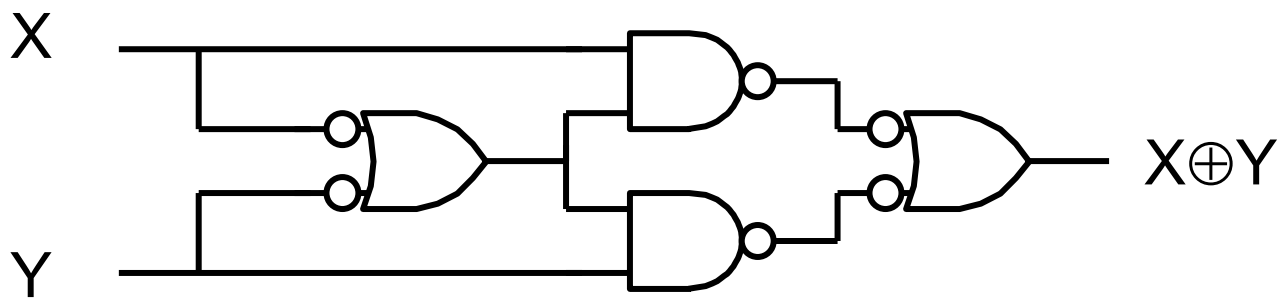

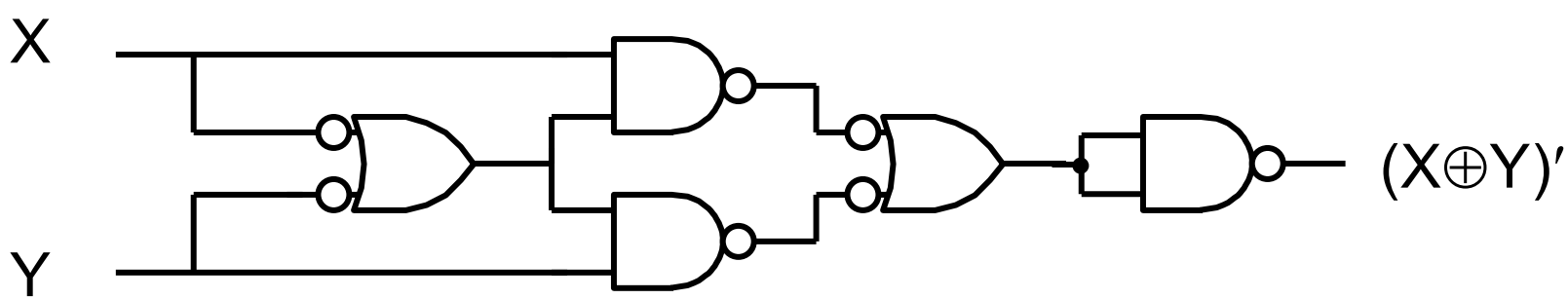

Example (1/3): Two Equations

- Show that $F_1 = F_2$ using a Truth Table.

$F_1 = X' \bullet Y' \bullet Z + X' \bullet Y \bullet Z + X \bullet Y'$

$F_2 = X' \bullet Z + X \bullet Y'$

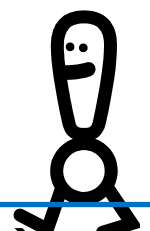

To prove the equality, we can use Switching Algebra theorems **T8 + T5**.

(T8) → $XY + XZ = X(Y + Z)$
(T5) → $X + X' = 1$
Show: prove that $F_1 = F_2$ using Switching Algebra,
$F_1 = X'Y'Z + X'YZ + XY' =$
$= X'Z(Y' + Y) + XY'$, using (T8)
$= X'Z + XY'$, using (T5)
$= F_2$

X	Y	Z	F_1	F_2
0	0	0	0	0
0	0	1	1	1
0	1	0	0	0
0	1	1	1	1
1	0	0	1	1
1	0	1	1	1
1	1	0	0	0
1	1	1	0	0

$F_1 = X'Z(Y' + Y) + X \cdot Y'$

$= X'Z + XY'$

Example (2/3): Two Equations

$F_1 = X' \bullet Y' \bullet Z + X' \bullet Y \bullet Z + X \bullet Y'$

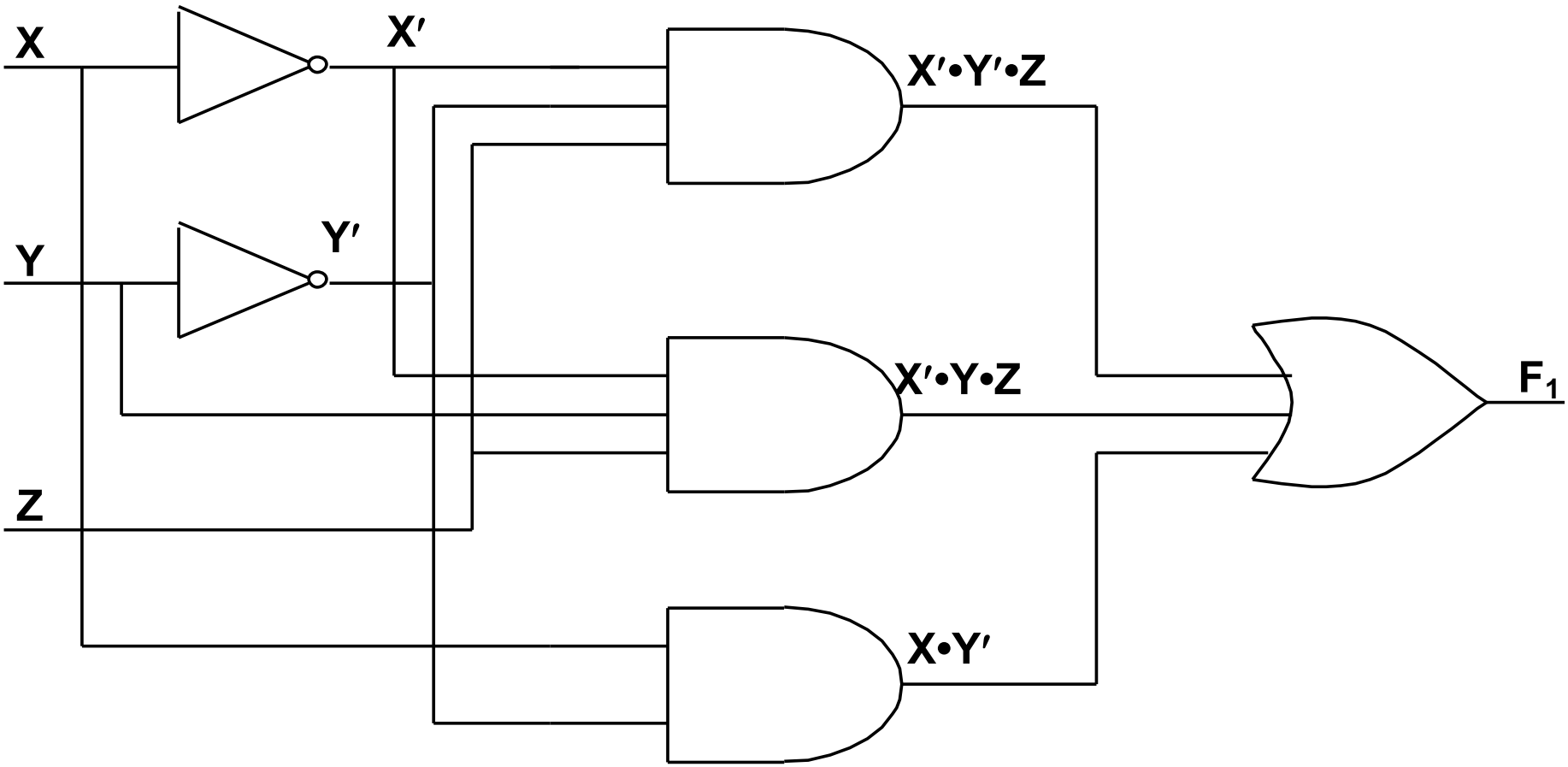

Example (3/3): Two Equations

To be completed in class …

$F_2 = X' \bullet Z + X \bullet Y'$

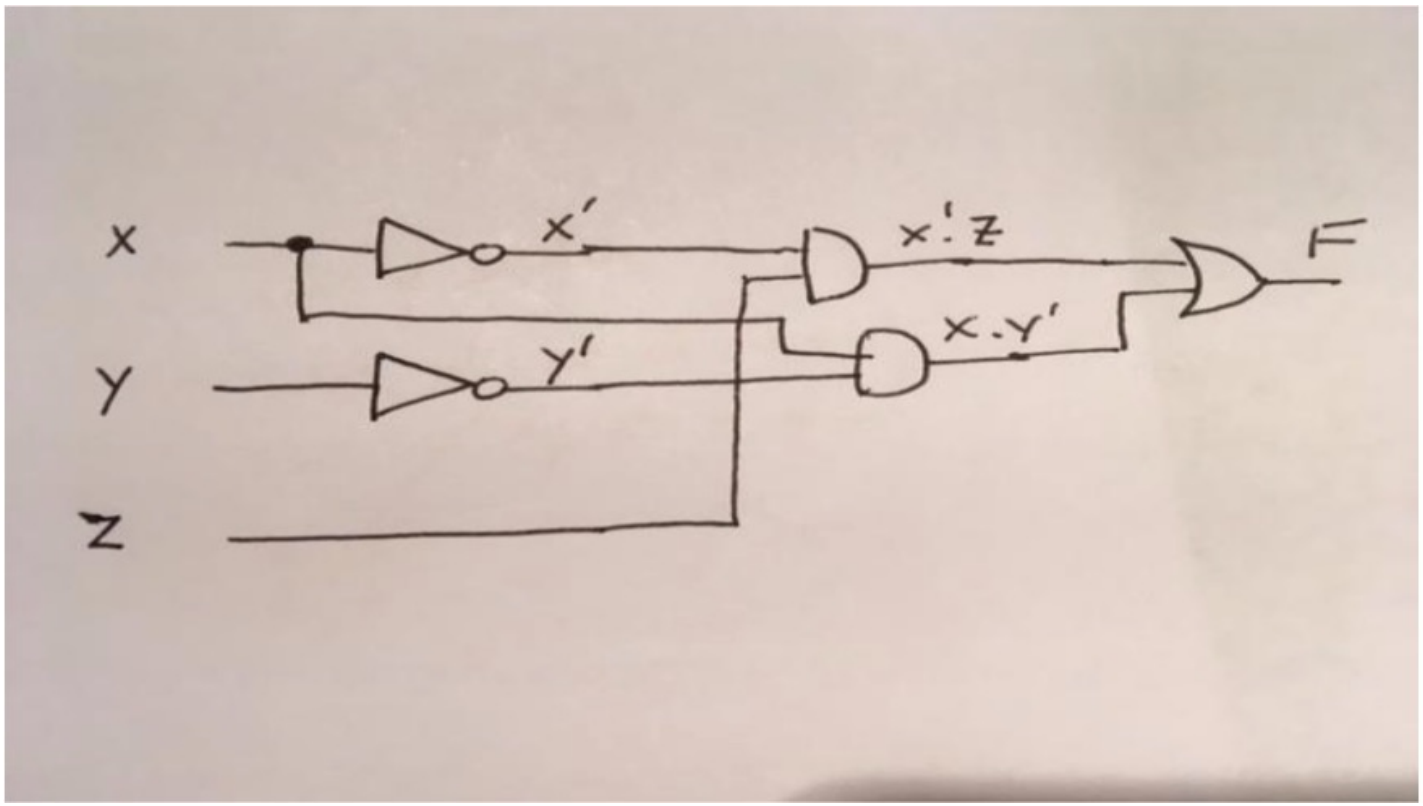

Example 1: Minimisation

$F = A'B'C + AB'C$

$\Updownarrow$ (T10) – Combining Theorem

$F = B'C$

How is (T10) applied here?

Alternatively, if we were to factor ***A*** out, it would have left us with:

$F = B'C(A' + A)$ **(using T8)**

$A' + A = 1$ **(using T5)**

therefore, **$F = B'C$**

Example 2: Minimisation (1)

$F = A'B'C' + A'B'C + A'BC$

$A'B'C = A'B'C + A'B'C$

(T3) $\boldsymbol{X + X = X}$

$A'B' + A'BC = A'(B' + BC) = A'(B' + C)$

absorption

$F = A'B'C' + A'B'C + A'B'C + A'BC$

T10 **T10**

$F = A'B' + A'C$

(T10) $\boldsymbol{XY + XY' = X}$

Circuit Diagrams for these functions?

$= A'(B' + C)$

Note: Can be further simplified to F = A'(B'+C)

Example 2: Minimisation (2)

To be completed in class …

F = A′B′C′ + A′B′C + A′BC

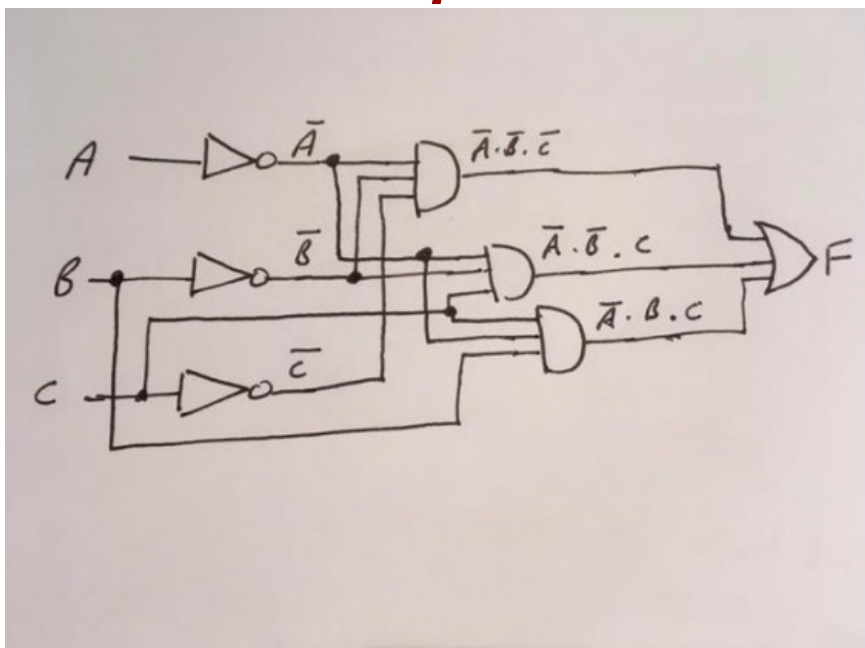

F = A′B′ + A′C

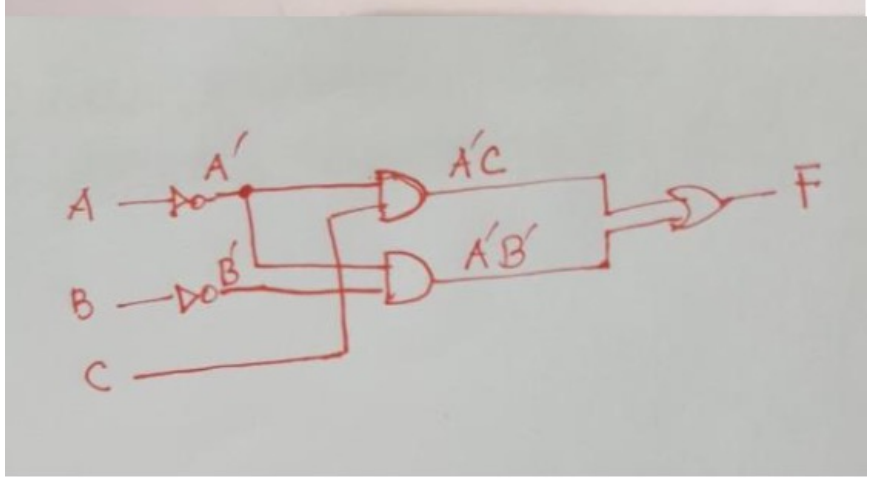

Example: Minimisation of F

Simplify $F = (AB'(A + C))' + A'B(A + B' + C)'$

$= (AB' + AB'C)' + A'B(A + B' + C)'$ ← MULTIPLY THROUGH TERM 1 APPLYING (T3′) X•X=X

APPLY (T13′) to $(AB' + AB'C)'$ & $(A + B' + C)'$ → $= (A' + B)(A' + B + C') + A'B(A'BC')$

这个 solution 麻烦

EXPAND TERMS

$= (A' + B)(A' + B + C') + A'BC'$

$= A'A' + A'B + A'C' + BA' + BB + BC' + A'BC'$

APPLY (T3′) → $= A' + A'B + A'C' + BA' + B + BC' + A'BC'$

APPLY (T1′) → $= A'(1 + B + C' + B + BC') + B(1 + C')$

APPLY (T2) → $= A'(1) + B(1)$

$= A' + B$

$(AB' + AB'C) + A'B(A'BC')$

$= [AB'(1+C)]' + A'BC' = A' + B + A'BC'$

$= A'(1+BC') + B = A' + B$

Logic Functions (1/2)

- Logic Functions' Representations: 3种 真值表, standard SOP / POS
  - ***Truth Table***: practical only for a small number of variables.
  - ***Algebraic sum of minterms*** (*Canonical Sum*): standard SOP standard of produc
    - ***minterm***: a product of ***n*** distinctive logic variables (or their complements); e.g., ***X · Y · Z***;
    - the ***sum of minterms*** corresponds to the combination of Truth Table rows for which the function produces a ***1*** output;
    - for a ***n-variable*** logic function, each ***minterm*** must consist of ***n*** variables and within each ***minterm***, each variable is represented by its complement if the variable value is ***0***.

Logic Functions (2/2)

- Logic Functions' Representations (cont.):
  - ***Algebraic product of maxterms*** (*Canonical Product*):
    - ***maxterm***: is the sum of ***n*** distinctive logic variables or their complements e.g., ***X+Y+Z***;
    - the ***product of maxterms*** corresponds to the product of Truth Table rows for which the function produces a ***0*** output;
    - for a ***n-variable*** logic function, each ***maxterm*** must consist of ***n*** variables and within each ***maxterm***, each variable is represented by its complement if the variable value is ***1***.

and

or

Minterms & ***Maxterms*** for 3 Variables

X	Y	Z	Product Term	Symbol	Sum Term	Symbol
0	0	0	$\overline{X}\cdot\overline{Y}\cdot\overline{Z}$	m_0	$X+Y+Z$	M_0
0	0	1	$\overline{X}\cdot\overline{Y}\cdot Z$	m_1	$X+Y+\overline{Z}$	M_1
0	1	0	$\overline{X}\cdot Y\cdot\overline{Z}$	m_2	$X+\overline{Y}+Z$	M_2
0	1	1	$\overline{X}\cdot Y\cdot Z$	m_3	$X+\overline{Y}+\overline{Z}$	M_3
1	0	0	$X\cdot\overline{Y}\cdot\overline{Z}$	m_4	$\overline{X}+Y+Z$	M_4
1	0	1	$X\cdot\overline{Y}\cdot Z$ =1	m_5	$\overline{X}+Y+\overline{Z}$ =0	M_5
1	1	0	$X\cdot Y\cdot\overline{Z}$	m_6	$\overline{X}+\overline{Y}+Z$	M_6
1	1	1	$X\cdot Y\cdot Z$	m_7	$\overline{X}+\overline{Y}+\overline{Z}$	M_7

Maxterms

Minterms

A *minterm* and a *maxterm* with the same subscript number are complements of each other: $M_0 = \overline{m_0}$

Representing a Function in *Standard Form*

A Boolean Function can be expressed algebraically from a given Truth Table by forming the logical sum of all ***minterms*** which produce a '***1***' in the function.

truth table → circuit

Truth Table

X	Y	Z	F	$\overline{F}$	
0	0	0	1	0	m_0
0	0	1	0	1	m_1
0	1	0	1	0	m_2
0	1	1	0	1	m_3
1	0	0	0	1	m_4
1	0	1	1	0	m_5
1	1	0	0	1	m_6
1	1	1	1	0	m_7

F = 1 for each of the combinations of variables:

X'•Y'•Z', X'•Y•Z', X•Y'•Z, X•Y•Z.

So: $F = X'\bullet Y'\bullet Z' + X'\bullet Y\bullet Z' + X\bullet Y'\bullet Z + X\bullet Y\bullet Z$

$F = \mathbf{m_0} + \mathbf{m_2} + \mathbf{m_5} + \mathbf{m_7} = \Sigma m(0, 2, 5, 7)$

minterm 找1 SOP

maxterm 找0 POS

And: $F' = \mathbf{m_1} + \mathbf{m_3} + \mathbf{m_4} + \mathbf{m_6} = \Sigma m(1, 3, 4, 6)$

$F'' = (\mathbf{m_1} + \mathbf{m_3} + \mathbf{m_4} + \mathbf{m_6})'$

$F'' = \mathbf{m_1}' \bullet \mathbf{m_3}' \bullet \mathbf{m_4}' \bullet \mathbf{m_6}'$

$F = \mathbf{M_1} \bullet \mathbf{M_3} \bullet \mathbf{M_4} \bullet \mathbf{M_6} = \prod M(1, 3, 4, 6)$

先化简再表达.

product

$M = \overline{m}$

Minterms & Sum of Products

- Properties of *Minterms*:
  - There are 2^n minterms for n Boolean variables.
  - Any Boolean function can be expressed as a logical sum of *minterms*.
  - A function's complement contains those *minterms* not included in the original function.
  - A function that includes all the 2^n *minterms* is <u>always</u> equal to logic value *1*.

- Sum of Products' Expressions:
  - Similar to *sum of minterms*, but the *sum of products* is in simplified form and may not contain all the variables in each expression.
  - Used in design process to achieve solutions with minimum gate counts.

Example: Sum of Products & Simplification (1/2)

A Boolean Function in ***Sum of Minterms*** form can be simplified to a ***Sum of Products*** form by algebraic manipulation or map simplification.

Truth Table

X	Y	Z	F	
0	0	0	1	m_0
0	0	1	1	m_1
0	1	0	1	m_2
0	1	1	0	m_3
1	0	0	1	m_4
1	0	1	1	m_5
1	1	0	0	m_6
1	1	1	0	m_7

F = 1 for each of the combinations of variables:
X'•Y'•Z', X'•Y'•Z, X'•Y•Z', X•Y'•Z', X•Y'•Z

So:

SOP → まとめ

F = X'•Y'•Z' + X'•Y'•Z + X'•Y•Z' + X•Y'•Z' + X•Y'•Z

F = Σm(0, 1, 2, 4, 5)

∴ ***F*** can be simplified by algebraic or map simplification techniques to a ***Sum of Products***.

Then can use Boolean Algebra to simplify the function…..

Example: Sum of Products & Simplification (2/2)

Which equation is easier to build?

$$F = X'\bullet Y'\bullet Z' + X'\bullet Y'\bullet Z + X'\bullet Y\bullet Z' + X\bullet Y'\bullet Z' + X\bullet Y'\bullet Z$$

T10 T10

$$F = X'\bullet Y' + X'\bullet Y\bullet Z' + X\bullet Y'$$

T10 护手霜.

$$F = Y' + X'\bullet Y\bullet Z'$$

absorbed.

T* (Adsorption Theorem)

$$F = Y' + X'\bullet Z'$$

Simplification of **F** using algebraic manipulation.

(a) $F = AB'(C+D) + C'D'$

$= AB'(C'D')' + C'D'$

$= AB' + C'D'$

(b) $F = (A+B)(A+C')(A+D)(BC'D+E)$

$= (A+BC')(A+D)(BC'D+E)$

$= (A+BC'D)(E+BC'D)$

$= BC'D + AE$

Queen Mary University of London

Exercise

Simplify the following two functions:

a) F=AB'(C+D)+C'D'

b) G=(A+B)(A+C')(A+D)(BC'D+E)

Exercise

Solutions……

a)

$F=AB'(C+D)+C'D'$

$= AB'(C'D')'+C'D'$ [de Morgan's Theorem]

$=AB'+C'D'$ [T8']

b)

$G=(A+B)(A+C')(A+D)(BC'D+E)$

$=(A+BC')(A+D)(E+BC'D)$ [T8': $(X+Y)(X+Z)=X+YZ$]

$=(A+BC'D)(E+BC'D)$ [T8': $(X+Y)(X+Z)=X+YZ$]

$=AE+BC'D$ [T8']

Minterm & *Maxterm* Expansions of *F*, *F'*

Example for F(X, Y, Z): 2^3 terms (numbered *0* through to *7*).

Given Form	Minterm Expansion of F	Maxterm Expansion of F	Minterm Expansion of F'	Maxterm Expansion of F'
F = ∑m(3,4,5,6,7)	– 反	∏M(0,1,2)	∑m(0,1,2)	反 ∏M(3,4,5,6,7)
F = ∏M(0,1,2)	∑m(3,4,5,6,7) 反	–	∑m(0,1,2)	反 ∏M(3,4,5,6,7)

总结了一下.

Expansion into Canonical SOP & POS

- How to **expand Boolean function into canonical SOP**:
  - Use properties (T1') and (T5).
  - Take each *product term* with a missing literal variable (e.g., A) and **AND** it (logic operation) with the *sum term* (A + A').

- How to **expand Boolean function into canonical POS**:
  - Use the *distributive property* i.e., (T8').
  - Take each *sum term* with a missing literal variable (e.g., A) and **OR** it (logic operation) with the *product term* (A.A').

Example: Sum of Products

Problem: Expand the boolean function **F(A,B,C) = A′B′ + BC** into a standard *sum of products* (*aka minterm expansion*, *canonical SOP*).

变成SOP

```
F(A,B,C) = A′B′ + BC
         = A′B′(C+C′) + BC(A+A′)   by (T5), (T1′)
         = A′B′C + A′B′C′ + ABC + A′BC   by (T8), (T6), (T6′)
           0 0 1   0 0 0   1 1 1   0 1 1
```

To get the Σm expression, replace all *normal literals with a 1* and all *primed literals with a 0*: (***Example***: A′B′C ⇒ A′ = 0, B′ = 0, C = 1 ⇒ 001).

F(A,B,C) = Σm(001, 000, 111, 011)

1 0 7 3

Now convert to decimal (and put them in order), F(A,B,C) = Σm(0, 1, 3, 7).

Example: Product of Sums

Problem: Expand the boolean function **F(A,B,C) = A′B′ + BC** into a standard *product of sums* (*aka maxterm expansion*, *canonical POS*).

```
F(A,B,C)= A′B′ + BC
  = (A′B′+B)(A′B′+C)                    by variable substitution, (T8')
  = (A′+B)(B′+B)(A′+C)(B′+C)            by (T8')
  = (A′+B+CC′)(A′+C+BB′)(B′+C+AA′)      by (T1), (T5')
  = (A′+B+C)(A′+B+C′)(A′+C+B)(A′+C+B′)(B′+C+A)(B′+C+A′)
  = (A′+B+C)(A′+B+C′)(A′+B′+C)(A+B′+C)  by (T3'), (T6)
```

1 0 0 1 0 1 1 1 0 0 1 0

POS

To get the ΠM expression replace all *normal literals with a 0* and all *primed literals with a 1*: (***Example***: A′+B′+C ⇒ A′ = 1, B′ = 1, C = 0 ⇒ 110).

F(A,B,C) = ΠM (100, 101, 110, 010)

Now convert to decimal (and order them): F(A,B,C) = ΠM (2, 4, 5, 6).

用truth table更容易

Deriving the Standard *Product of Sums* Expression

- ***Remember***: If you are unsure of your answer, you can check it with a Truth Table; fill in Truth Table as per original **F = A'B' + BC**!

For: **F'** (*minterms*) or **F** (*maxterms*) where **F = 0**.

A	B	C	F
0	0	0	1
0	0	1	1
0	1	0	0
0	1	1	1
1	0	0	0
1	0	1	0
1	1	0	0
1	1	1	1

For: **F** (*minterms*) or **F'** (*maxterms*) where **F = 1**.

Does our expression have all the terms indicated by the Truth Table?

F = (A'+B+C)(A'+B+C').
(A'+B'+C)(A+B'+C)